STANDARD TRAVEL DIMENSIONS (IN)		
	RIDE HEIGHT	
DESCRIPTION	6.5"	9.0"
JOUNCE	3.8	5.2
BUMPER CONTACT	3.2	4.6
REBOUND	4.2	4.2
"H"	2.7	3.8
"J"	10.7	13.2
WEIGHT (LB)	463	467

BRAKE CHAMBER LOCATIONS	
ROCKWELL	DANA
*8.71	*9.50

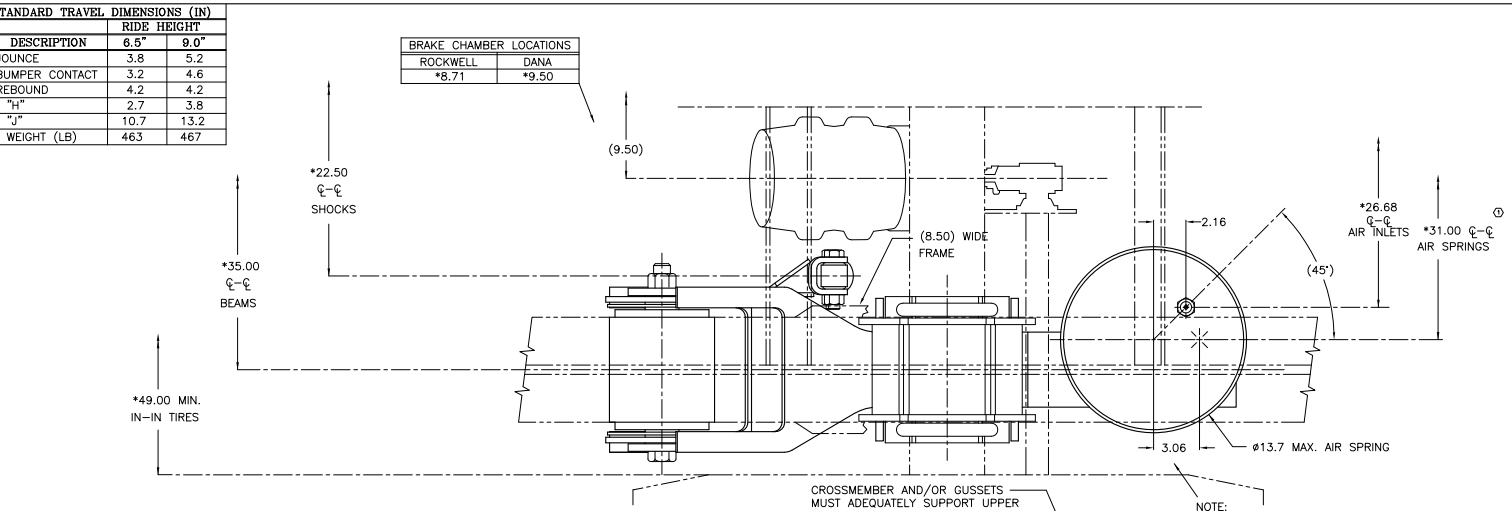

CROSSMEMBER AND/OR GUSSETS MUST ADEQUATELY SUPPORT UPPER AIR SPRING PLATE. 20,000 LB CAN BE EXERTED THROUGH AIR SPRING BUMPER.

NOTE:
IF FRAME RAIL IS WIDER THAN 6.50 ROTATE AIR SPRING RUBBER 45° TO 3.06 POSITION. MOUNT BAG PLATE ACCORDINGLY. RETORQUE PISTON BOLT TO 40–50 FT LB

NOTES:
1. BEFORE INSTALLING SUSPENSION READ INSTALLATION MANUAL.
2. SUGGESTED CROSSMEMBER LOCATIONS ARE SHOWN. ACTUAL SIZE AND SHAPE MAY VARY WITH TRAILER DESIGN. IT IS THE RESPONSIBILITY OF THE SUSPENSION INSTALLER TO ENSURE STRUCTURAL ADEQUACY OF TRAILER FRAME AND CROSSMEMBER.
3. ALL WELDING PROCEDURES MUST BE DONE IN ACCORDANCE WITH L577 (HT INSTALLATION PROCEDURES)
4. REFER TO THE AXLE/Y–BEAM INSTALLATION SECTION OF L577 FOR INSTRUCTION ON INSTALLING THE PIVOT BUSHING TUBE SLEEVES AND ASSEMBLIES INTO THE TRAILER FRAME.
5. * SYMBOL DENOTES TO ADD 6.0 INCHES FOR 102.0 INCH WIDE TRAILERS.
6. LOAD CAPACITY: 25,000 LB AT GROUND.
7. SEE L579, ALIGNMENT PROCEDURES, FOR WELDED COLLAR PIVOT CONNECTION ASSEMBLY.
8. RECOMMENDED BRAKE CAMSHAFT AND BRAKE CHAMBER LOCATIONS MAY VARY SLIGHTLY BASED ON AXLE MANUFACTURERS RECOMMENDATIONS.
9. IT IS THE RESPONSIBILITY OF THE INSTALLER TO ENSURE PROPER VEHICLE FRAME DESIGN IN AREA OF SUSPENSION ATTACHMENT.

CLEARANCE SPECIFICATIONS:
a) 1.0 INCH MINIMUM REQUIRED BETWEEN TOP OF THE TIRE AND BOTTOM OF TRAILER STRUCTURE WHEN AXLE IS AT FULL JOUNCE.
b) 2.0 INCHES MINIMUM REQUIRED BETWEEN INSIDE OF TIRE AND TRAILER STRUCTURE FOR LATERAL MOVEMENT.
c) 1.0 INCH MINIMUM CLEARANCE MUST BE MAINTAINED AROUND AIR SPRING WHEN IT IS AT MAXIMUM DIAMETER.
d) ALLOW 1.5 INCHES AROUND FORWARD SECTION OF BEAM ASSEMBLY FOR SUSPENSION MOVEMENT.

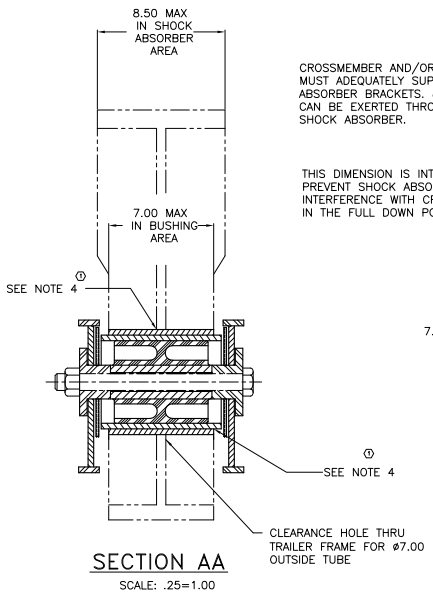

SECTION AA
SCALE: .25=1.00

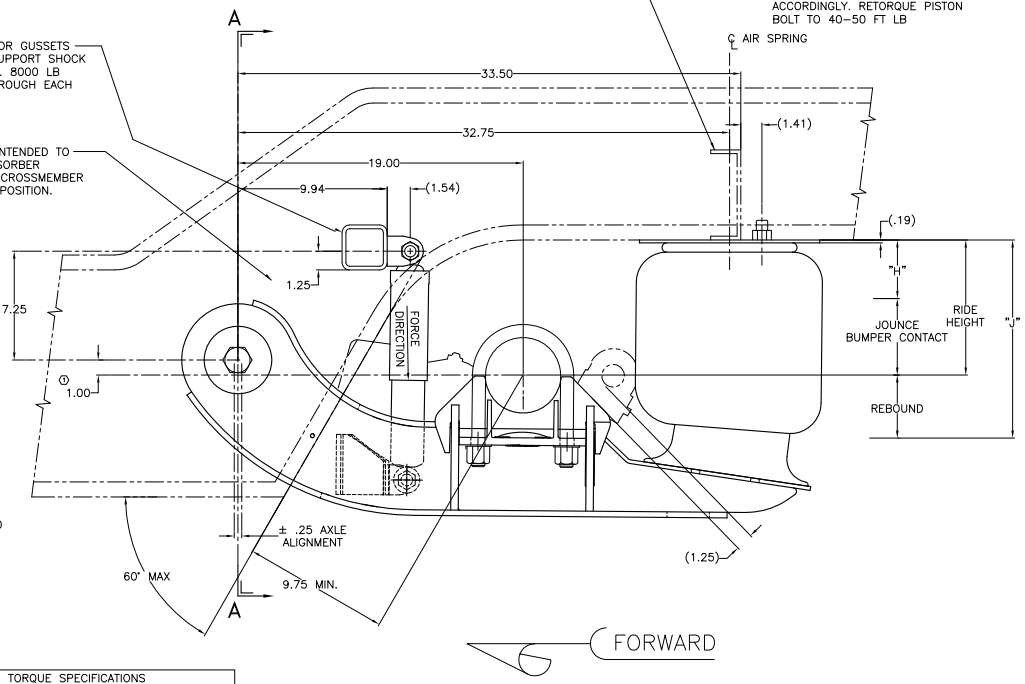

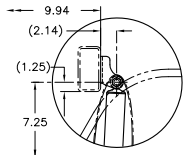

CLEVIS FOR SHOCK STRAP

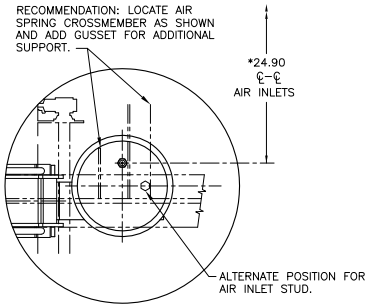

ROTATED STUD AIR SPRING

ROTATED AIR SPRING
SCALE: .125 = 1.000

This Print remains the property of Hendrickson. All information contained thereon is confidential. It is loaned, subject to return on demand and on express condition that it is not to be copied or used directly or indirectly for any purpose other than the purpose for which it has been loaned to you.

TORQUE SPECIFICATIONS		
DESCRIPTION	SIZE	TORQUE (FT–LB)
SHOCK BOLTS, UPPER	3/4–10	210–235
SHOCK BOLTS, LOWER	3/4–16	210–235
AIR SPRING NUTS, UPPER	3/4–16	80–100
AIR SPRING BOLTS, LOWER	1/2–13	40–50
U–BOLTS	7/8–14	475–525
PIVOT BOLT	1 1/8–7	750–825

HENDRICKSON
TRAILER SUSPENSION SYSTEMS
2070 INDUSTRIAL PLACE S.E., CANTON, OH 44707-2800 U.S.A.

UNLESS OTHERWISE NOTED:
TOLERANCES ARE: .X: ± .1 .XX: ± .06 .XXX: ± .030 ANGULAR: ± 0.5°
DIMENSIONS ARE: INCHES
3RD ANGLE PROJECTION
DIMENSIONS ADHERE TO ANSI Y14.5M–1982

REV.	ECN NO.	BY	DATE
1	18595	K.E	01/12/10
0	16928	K.E	09–29–09

DRAWN BY: K. ERDMANN 09–03–09
CHK'D BY: C. ANDERSON
APP'D BY: S. BATES

THIS DRAWING IS THE CONFIDENTIAL PROPERTY OF HENDRICKSON

HT250U–Y SUSPENSION
INSTALLATION
WELD–ON ALIGNMENT

SCALE .25=1.00 | SIZE D | PAGE 1 OF 1
DRAWING No. D–31379