This print remains the property of Hendrickson. All information contained thereon is confidential. It is loaned, subject to return on demand, and on the express condition that it is not to be copied or used directly or indirectly for any purpose other than the purpose for which it has been loaned to you.

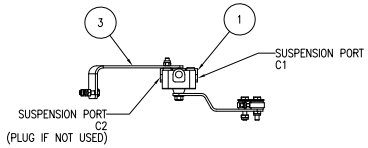

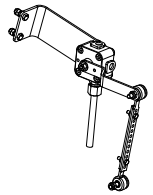

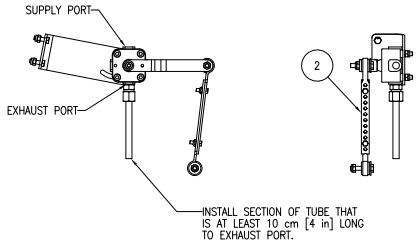

NOTES:

1. DO NOT ADD LUBRICATION TO AIR SYSTEM.
2. ALL CONNECTIONS MUST BE LEAK PROOF.
3. AVOID BENDS IN AIR LINES.
4. DO NOT OVER TIGHTEN LINK MOUNTING BOLTS. THE LINK SHOULD PIVOT FREELY ABOUT THE BOLT. THE LINK, WHEN PROPERLY INSTALLED, SHOULD APPEAR VERTICAL WHEN VIEWING IT FROM THE FRONT OF THE SUSPENSION.
5. TO MAKE FINE ADJUSTMENTS IN RIDE HEIGHT LOOSEN HCV MOUNTING NUTS AND ROTATE VALVE BODY.
6. ALL ITEMS SHIPPED UNASSEMBLED. FITTINGS, NUTS, AND BOLTS TO BE PLACED IN A PLASTIC BAG.
7. RECOMMENDED AIRLINE FITTING INSTALLATION TORQUE NOT TO EXCEED 9.5 N-M (7 FT-LB).
8. PORT SIZES:
   PPV: M12 X 1.5 SUPPLY AND OUTPUT PORTS.
   HCV: M12 X 1.5 ALL PORTS.
   MANIFOLDS: M12 X 1.5 ALL PORTS.
9. THE FOLLOWING AIR TANK CAPACITIES ARE RECOMMENDED AS MINIMUMS. CHECK LOCAL REGULATIONS FOR MINIMUM AIR CAPACITY REQUIREMENTS:
   a. 2 AXLE: 50L [3050 in^3]
   b. 3 AXLE: 75L [4575 in^3]
   c. 4 AXLE: 100L [6100 in^3]

OPERATION:

VALVE ARM HORIZONTAL
FRAME IS AT PRESET HEIGHT
NO AIR FLOW OCCURRING.

VALVE ARM DOWN
FRAME IS HIGH, AIR SPRINGS ARE EXHAUSTED UNTIL ARM IS HORIZONTAL.

VALVE ARM UP
FRAME IS LOW, AIR SPRINGS ARE INFLATED UNTIL ARM IS HORIZONTAL.

APPLICATION:

AKH0308-1: HCV, SINGLE OR NO MANIFOLD.
AKH0308-2: HCV, TANDEM.
AKH0308-3: HCV, TRIDEM.
AKH0308-4: HCV, QUAD.

ITEM	PART NO.	DESCRIPTION	AKH0308 -1 QTY	-2 QTY	-3 QTY	-4 QTY
1	A-31319	HCV (METRIC PORTS)	1	1	1	1
2	B-25647	LINK ASSEMBLY - FIXED LENGTH	1	1	1	1
3	B-31489	HCV BRACKET	1	1	1	1
4	A-31873	PPV (METRIC PORTS)	1	1	1	1
5	B-32606	METRIC MANIFOLD, TRIDEM	–	–	1	–
	B-32607	METRIC MANIFOLD	–	1	–	2
*6	A-34192-1	HCV SUB-KIT, HSDS, METRIC	1	–	–	–
	A-34192-2		–	1	1	–
	A-34192-3		–	–	–	1
*7	DWG AKH0308	HCV KIT FOR HSDS, METRIC	1	1	1	1
*8	L-668	INSTALLATION INSTRUCTIONS	1	1	1	1
		WEIGHT (KG)	0.89	1.09	1.18	1.29
		WEIGHT (LB)	1.93	2.38	2.58	2.82

* NOT SHOWN

2 AXLE (TANDEM) PIPING LAYOUT

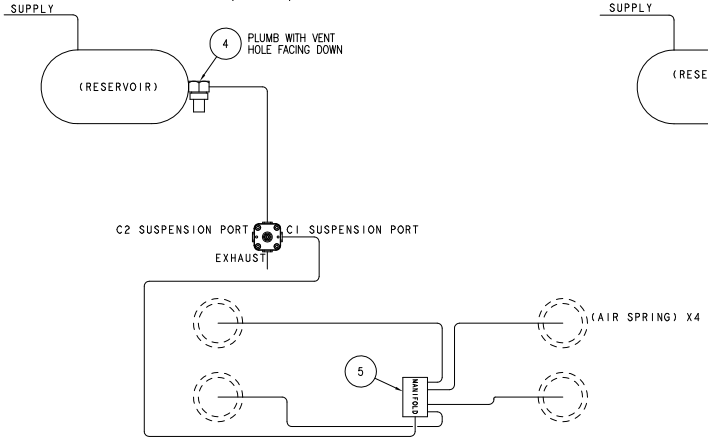

3 AXLE (TRIDEM) PIPING LAYOUT

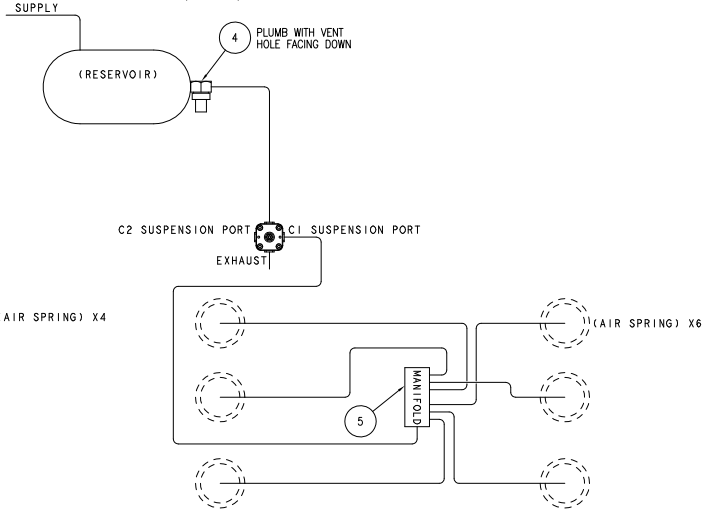

4 AXLE (QUAD) PIPING LAYOUT

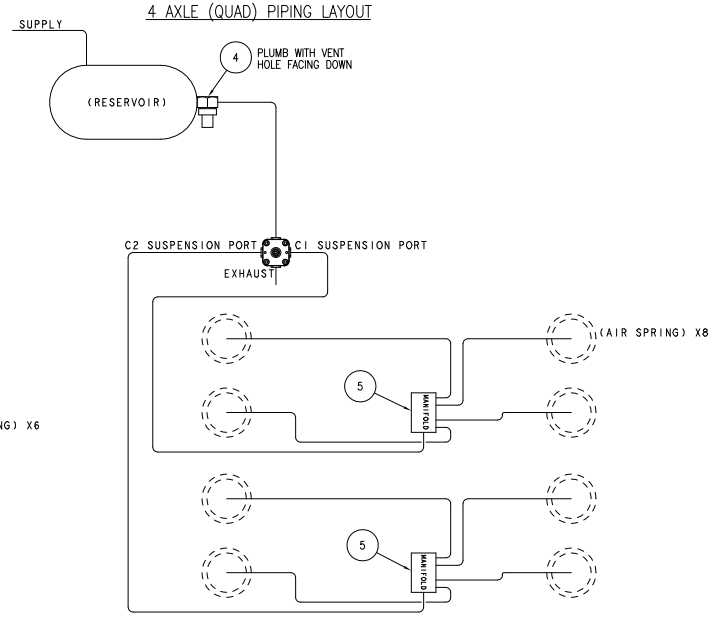

HENDRICKSON
TRAILER COMMERCIAL VEHICLE SYSTEMS
2070 INDUSTRIAL PLACE S.E. CANTON, OH 44707-2800 USA

UNLESS OTHERWISE NOTED:
TOLERANCES ARE:
X: ± 2.5
.X: ± 1.5
.XX: ± .75
ANGULAR: ± 0.5 °
DIMENSIONS ARE: MILLIMETERS
3RD ANGLE PROJECTION
DIMENSIONS ADHERE TO ANSI Y14.5M-1982

REV.	ECN NO.	BY	DATE
0	22248	AN	6-14-13

DRAWN BY: A. NGUYEN
CHECKED BY: A. BRUGGER
APPROVED BY: M. OYSTER
DATE: 6-13-13

THIS DRAWING IS THE CONFIDENTIAL PROPERTY OF HENDRICKSON

HCV KIT FOR HSDS, METRIC

SCALE: 1:4
PAGE: 1 OF 2
SIZE: D
DRAWING NUMBER: AKH0308

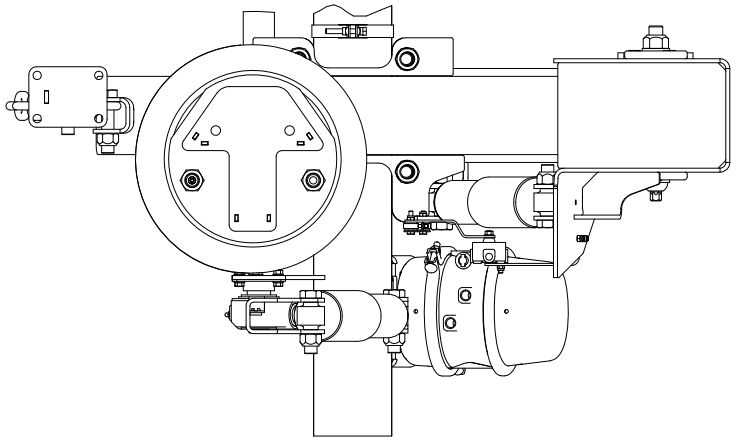

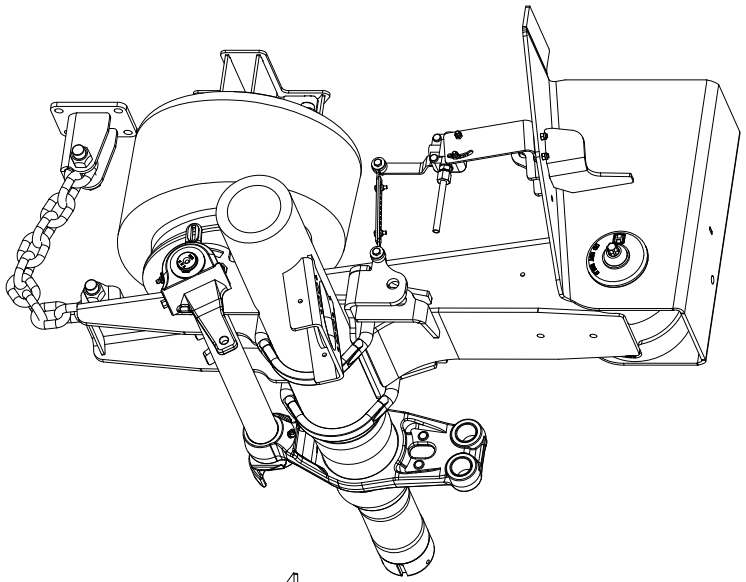

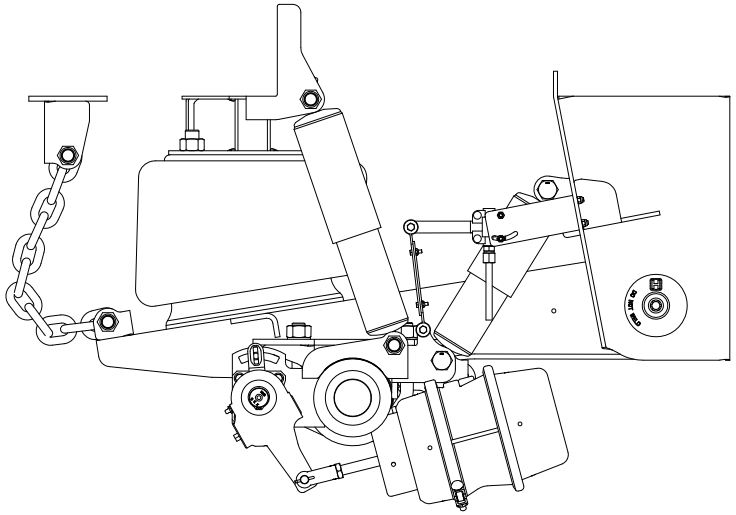

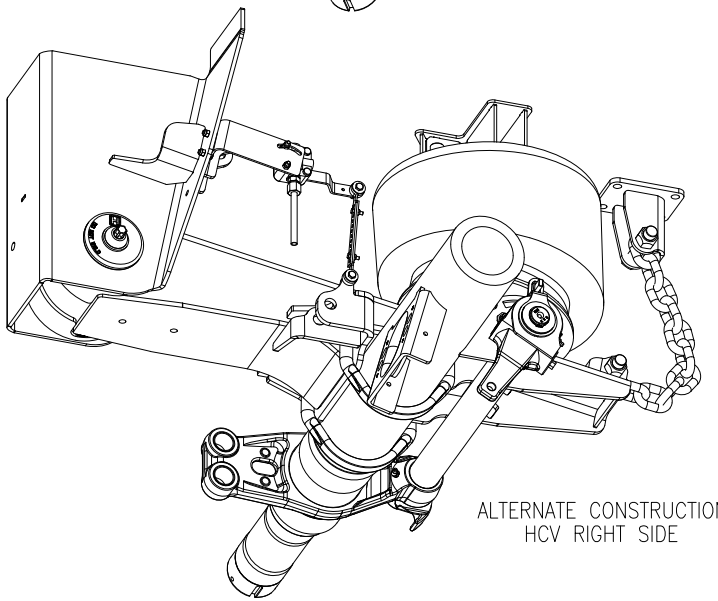

ALTERNATE CONSTRUCTION
HCV RIGHT SIDE

This print remains the property of Hendrickson. All information contained thereon is confidential. It is loaned, subject to return on demand, and on the express condition that it is not to be copied or used directly or indirectly for any purpose other than the purpose for which it has been loaned to you.

HENDRICKSON
TRAILER COMMERCIAL VEHICLE SYSTEMS
2070 INDUSTRIAL PLACE S.E. CARROLL OH 43112-2800 USA

UNLESS OTHERWISE NOTED:
TOLERANCES ARE:
X: ± 2.5
.X: ± 1.5
.XX: ± .75
ANGULAR: ± 0.5 °
DIMENSIONS ARE: MILLIMETERS
3RD ANGLE PROJECTION
DIMENSIONS ADHERE TO ANSI Y14.5M-1982

REV.	ECN NO.	BY	DATE
0	22248	AN	6-14-13

DRAWN BY: A. NGUYEN
CHECKED BY: A. BRUGGER
APPROVED BY: M. OYSTER
DATE: 6-13-13

THIS DRAWING IS THE CONFIDENTIAL PROPERTY OF HENDRICKSON

HCV KIT FOR HSDS, METRIC

SCALE: 1:4
PAGE: 2 OF 2
SIZE: D
DRAWING NUMBER: AKH0308